PRODUCT DATASHEET
DL SLIM FRAME DN 210 WT

DOWNLIGHT SLIM ROUND FRAME | Surface mounting frame, round shape

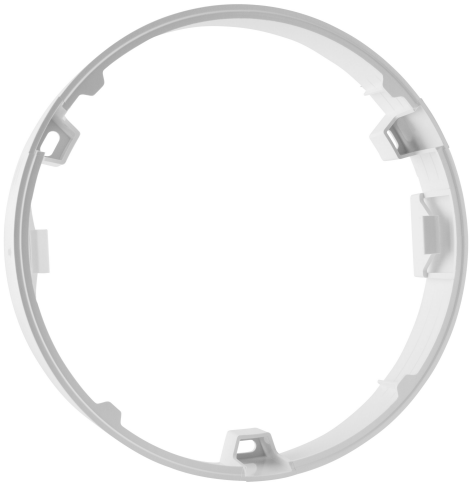

Areas of application

- General illumination
- Public areas
- Stairways
- Corridors
- Foyers
- Shops

Product benefits

- Cable entry on the side for electrical connection with low profil
- Easy installation thanks to included drilling template

Product features

- Low mounting depth
- Robust polycarbonate casing
- Mounting accessories included



© 2025, LEDVANCE GmbH. All rights reserved.

TECHNICAL DATA

Dimensions & Weight

Diameter	225 mm
Height	38 mm
Product weight	67.00 g

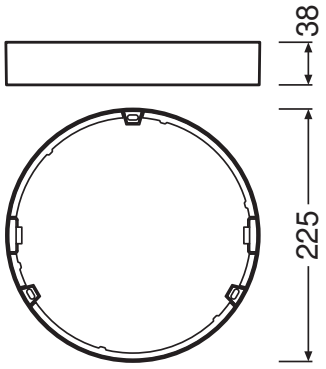

DL SLIM FRAME DN210 WT

Materials & Colors

Product color	White

Application & Mounting

Mounting location	Ceiling / Wall

Certificates & Standards

Ball shot safe	No

Additional product data

BEG eligible	No

Safety advice

- All electrical connections must be made by a qualified person.
- Product in protection class I. All electrically conductive, metallic housing parts that can absorb voltage during operation or during maintenance in the event of a fault must be continuously connected to the protective earthing conductor.

DOWNLOAD DATA

© 2025, LEDVANCE GmbH. All rights reserved.

	Documents and certificates	Document name
PDF	User Instruction / Safety Instructions	User Instruction DL Slim Frame Round

	Tender texts	Document name
TXT	Tender documents	DOWNLIGHT SLIM ROUND FRAME 210 WT-EN

LOGISTICAL DATA

Product code	Packaging unit (Pieces/Unit)	Dimensions (length x width x height)	Gross weight	Volume
4058075079199	Folding box 1	43 mm x 235 mm x 235 mm	156.00 g	2.37 dm^3
4058075079205	Shipping box 6	280 mm x 245 mm x 265 mm	1222.00 g	18.18 dm^3

The mentioned product code describes the smallest quantity unit which can be ordered. One shipping unit can contain one or more single products. When placing an order, for the quantity please enter single or multiples of a shipping unit.

DISCLAIMER

Subject to change without notice. Errors and omission excepted. Always make sure to use the most recent release.

© 2025, LEDVANCE GmbH. All rights reserved.