PRODUCT DATASHEET
DL SLIM SQ 105 6 W 4000 K WT

DOWNLIGHT SLIM SQUARE | Flat downlights with integrated driver, square shape



Areas of application

- Direct replacement for luminaires with compact fluorescent lamps
- General illumination
- Public areas
- Stairways
- Corridors
- Foyers
- Shops

Product benefits

- Very slim housing
- Low installation depth
- High luminous efficacy
- Energy savings up to 60 % (compared to luminaires that use CFL lamps)
- Very homogenous light
- Functional design
- Easy installation with fast connection
- Simple installation thanks to integrated driver

Product features

- Small visible bezel
- Connector box with push wire terminal for tool-free connection



© 2025, LEDVANCE GmbH. All rights reserved.

– Light guide made of non-yellowing PMMA for long lifetime

© 2025, LEDVANCE GmbH. All rights reserved.

TECHNICAL DATA

Electrical data

Nominal wattage	6.00 W
Nominal voltage	220…240 V
Mains frequency	50…60 Hz
Nominal current	58 mA
Inrush current	6 A
Inrush current time T_{h50}	120 µs
Max. number of luminaires per miniature circuit breaker B16	72
Max. number of luminaires per miniature circuit breaker C10	60
Max. number of luminaires per miniature circuit breaker C16	96
Power factor λ	0.50
Total harmonic distortion	< 20 %
Protection class	II
Operating mode	Integrated LED driver

Photometrical data

Luminous flux	430 lm
Luminous efficacy	70 lm/W
Color temperature	4000 K
Light color (designation)	Cool White
Color rendering index Ra	> 80
Standard deviation of color matching	< 6 sdcm
Luminous intensity	-
Flickering metric (Pst LM)	-
Stroboscope effect metric (SVM)	-
Photobiological safety group acc. to EN62778	RG0
Photobiological safety group acc. to EN62471	RG0
Beam angle	120 °

© 2025, LEDVANCE GmbH. All rights reserved.

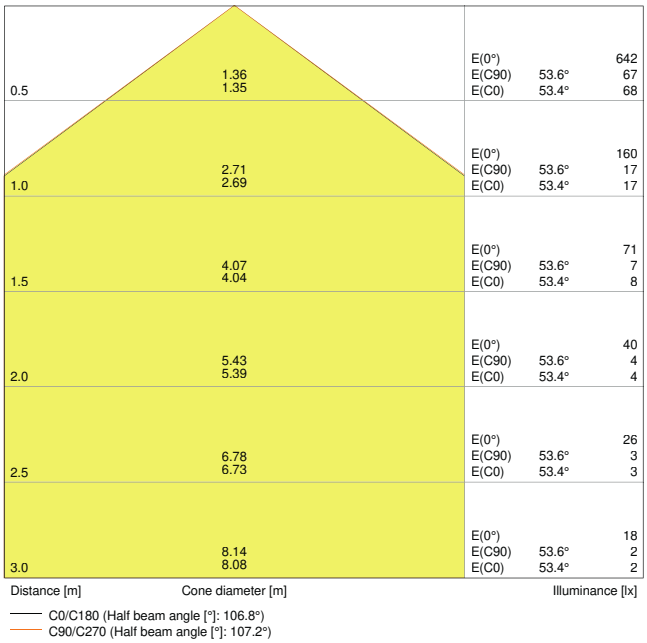

4058075052482 DL SLIM SQ105 6W 4000K WT IP20

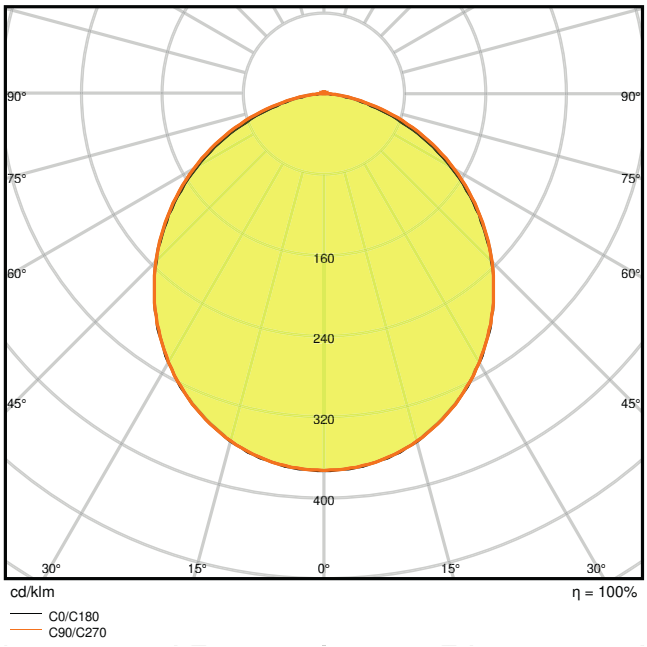

4058075052482 DL SLIM SQ105 6W 4000K WT IP20

Dimensions & Weight

Length	118.00 mm
Width	118.00 mm
Height	30.00 mm
Product weight	172.00 g

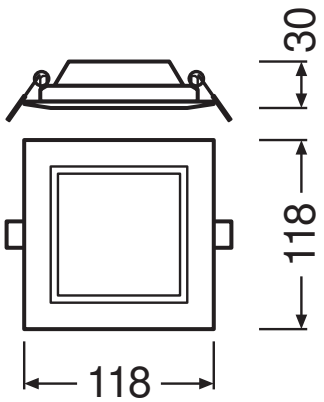

DL Slim SQ105 6W

© 2025, LEDVANCE GmbH. All rights reserved.

Materials & Colors

Product color	White
Housing color	White
Body material	Polycarbonate (PC)
Cover material	Polycarbonate (PC)
Light emitting surface material	Polycarbonate (PC)
Glow Wire Test according to IEC 60695-2-12	650 °C
Mercury content	0.0 mg

Application & Mounting

Ambient temperature range	-20…+50 °C
Temperature range at storage	-30…+70 °C
Type of connection	Screwless terminal, 2-Pole
Type of protection	IP20
Protection class IK (shock resistance)	IK03
Dimmable	No
Mounting type	Recessed
Mounting location	Ceiling / Wall
Application environment	Indoor
Mounting length	105.00 mm
Mounting width	105.00 mm
Mounting depth	50,0 mm
With light source	Yes

Lifespan

Lifespan L70/B50 at 25 °C	30000 h [1)]
Lifespan L80/B10 at 25 °C	20000 h [1)]
Lifespan L80/B50 at 25 °C	20000 h
Lifespan L90/B10 at 25 °C	12000 h
Number of switching cycles	50000

1) t[h]: L70 / B50 @ 25 °C (Ta), t[h]: L80 / B10 @ 25 °C (Ta), t[h]: L90 / B10 @ 25 °C (Ta)

Control gear

Output current	180 mA
ECG - Output ripple current	< 6.5 %

Certificates & Standards

© 2025, LEDVANCE GmbH. All rights reserved.

Standards	CE / CB / EAC
Luminaire with limited surface temperature, "D sign"	No
Ball shot safe	No
Replaceable light source (EPREL)	Not replaceable

Additional product data

Number of illuminants	Not relevant
BEG eligible	No

Accessories Optional

Product image	Product name	EAN
	DL SLIM FRAME SQ 105 WT	4058075079397

EQUIPMENT / ACCESSORIES

- Surface mounting frames available as accessories

Safety advice

- All electrical connections must be made by a qualified person.
- Caution, risk of electric shock.
- The luminaires are not suitable for covering with thermally insulated material.

DOWNLOAD DATA

	Documents and certificates	Document name
PDF	Extended installation guide	User Instruction Downlight LED Slim
PDF	On-Pack-Info	Legal Insert Downlight Slim
PDF	Legal information	LSI DL SLIM
PDF	Legal information	Informationstext 18 Abs 4 ElektroG

© 2025, LEDVANCE GmbH. All rights reserved.

	Documents and certificates	Document name
PDF	Declarations of conformity	CE Certificate downlight Slim
PDF	Declarations Of Conformity UKCA	DL SLIM WT IP20

	Photometric and lighting design files	Document name
IES	IES file (IES)	DL SLIM SQ105 6W 4000K WT IP20
LDT	LDT file (Eulumdat)	DL SLIM SQ105 6W 4000K WT IP20
ULD	ULD file (DIALux)	DOWNLIGHTSLIMSQUARE1056W4000KWT
ROLF	ROLF file (RELUX)	DL SLIM SQ105 6W 4000K
	UGR file (UGR table)	4058075052482 DL SLIM SQ105 6W 4000K WT IP20
	LDC typ cone	4058075052482 DL SLIM SQ105 6W 4000K WT IP20
	LDC typ polar	4058075052482 DL SLIM SQ105 6W 4000K WT IP20

	CAD/BIM files	Document name
RFA	BIM_Revit_3D	Downlight Slim Square
STEP	CAD_STEP_3D	DL SLIM SQ 105

	Tender texts	Document name
TXT	Tender documents	DOWNLIGHT SLIM SQUARE 105 6 W 4000 K WT-EN

LOGISTICAL DATA

Product code	Packaging unit (Pieces/Unit)	Dimensions (length x width x height)	Gross weight	Volume
4058075079236	Folding box 1	45 mm x 145 mm x 145 mm	206.00 g	0.95 dm^3
4058075079243	Shipping box 6	290 mm x 155 mm x 165 mm	1401.00 g	7.42 dm^3

The mentioned product code describes the smallest quantity unit which can be ordered. One shipping unit can contain one or more single products. When placing an order, for the quantity please enter single or multiples of a shipping unit.

© 2025, LEDVANCE GmbH. All rights reserved.

References / Links

– For Guarantee see www.ledvance.com/guarantee

DISCLAIMER

Subject to change without notice. Errors and omission excepted. Always make sure to use the most recent release.

© 2025, LEDVANCE GmbH. All rights reserved.