LUXA 103 S360-100-12 AP WH

Item no.: 1030062

Presence and motion detectors
Ceiling installation outdoor

Description

- Passive infrared presence detector, surface-mounting
- 1 channel light (relay 230 V)
- Circular detection area 360°, Ø 12 m (113 m²) at 3 m mounting height
- Extension of the detection area by parallel switching, a maximum of 8 detectors can be connected in parallel
- Networking with wall detector theMura Slave possible
- Connection option for push-button for manual switching
- Operation as fully or semi-automatic possible
- One directional brightness measurement (mixed light measurement)
- Teach-in function, pulse function, test function, staircase lighting function
- Ready for operation immediately due to factory presetting
- Changes of values and settings are possible with potentiometers and with one of these optional remote controls:
- App/universal remote control theSenda B
- Service remote control theSenda P
- Optional user remote control for manual override theSenda S/theSenda B
- Restriction of the detection range possible
- Also suitable for outdoor applications, by changing the installation location the detection range is reduced to Ø 8 m



Technical data

	LUXA 103 S360-100-12 AP WH
Operating voltage	230 V AC
Frequency	50 Hz
Stand-by consumption	ca. 0.5 W
Light measurement	Mixed light measurement
Colour	White
Switching output	Light
Installation type	Ceiling installation
Setting range brightness	5 lx - 1000 lx
Detection angle	360°
Installation height	2.5 - 3.5 m
Light switch-off delay	15 s - 30 min
Incandescent/halogen lamp load	2300 W

	LUXA 103 S360-100-12 AP WH
Inrush current	max. 500 A / 200 µs
LED lamp 2-8 W	400 W
LED lamp > 8 W	400 W
Lamp types	Incandescent/halogen lamps, fluorescent lamps, Energy saving lamps, LEDs
Detection range	113 m² (ø 12 m | 360°)
Detection range	Round
Remote controlled	√
Ambient temperature	-25°C ... 55°C
Type of protection	IP 54

LUXA 103 S360-100-12 AP WH

Item no.: 1030062

Connection example

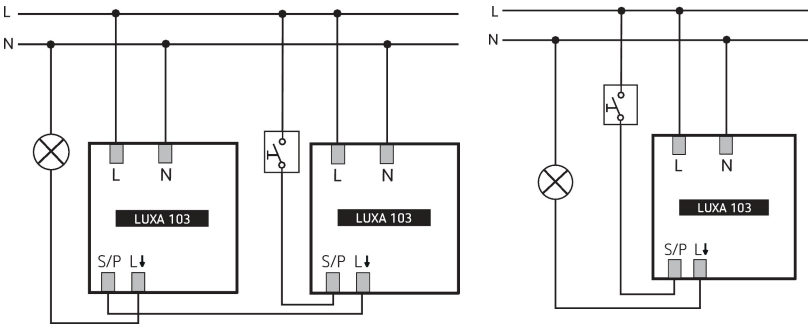

Detection range for planning applications at a temperature of 21 °C

Mounting height (A)	Sitting (S)	Diagonally (T)	Head on to (R)
2.5 m	13 m² | 4 m	78 m² | 10 m	28 m² | 6 m
3 m	20 m² | 5 m	113 m² | 12 m	28 m² | 6 m
3.5 m	20 m² | 5 m	78 m² | 10 m	28 m² | 6 m

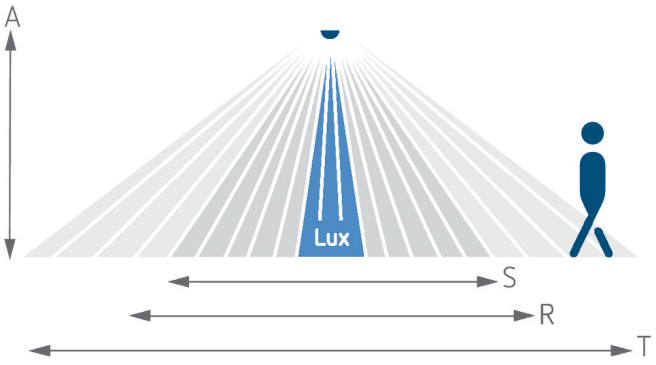

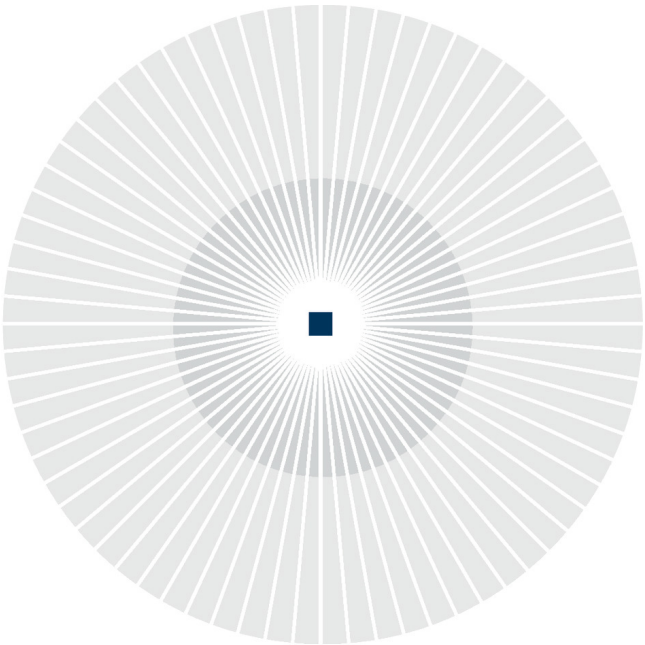

LUXA 103 S360-100-12 AP WH

Item no.: 1030062

Scale drawings

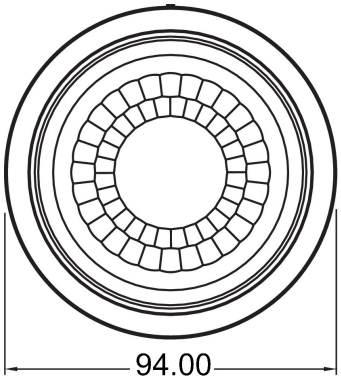

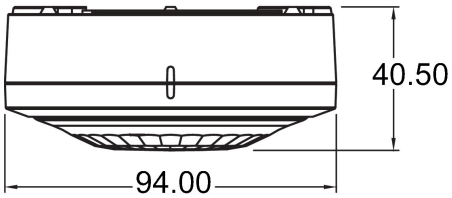

Accessories

theSenda P
Item no.: 9070910



theSenda S
Item no.: 9070911



theSenda B
Item no.: 9070985



Surface box LUXA 103 BK
Item no.: 9070843



Surface box LUXA 103 GR
Item no.: 9070844



QuickSafe
Item no.: 9070531

